Tonia

By: BurdaStyle

http://www.burdastyle.com/projects/tonia

Tonia is the piece in your closet that fits any occasion. Wear it with a beautiful evening top, a blazer and boots. Wear it with a cardigan and some tennis shoes. Our sample is made of a woolen suiting material; corduroy or plaids would make the whole look a bit sportier. The pattern is easy to adjust in length if need. You can also play with the width of the hemband at the leg. More difficult pattern changes would be adding to or eliminating the gathering.

Materials

Woolen suiting

Step 1

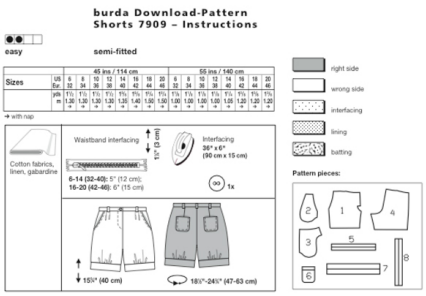

Pattern Pieces

1 Front Pant Piece 2X

2 Pocket 2x

3 Hip Yoke Piece 2x
4 Back Pant Piece 2x
5 Waistband 2x
6 Pocket 2x
7 Cuff 2x
8 Belt Loops 1x

Step 2

To print the patterns out at home, follow the instructions:
Paper cut for ANSI A (German DIN A4) prints:
The patterns are printed out on 24 sheets with a thin frame. Wait until all sheets are printed out. Arrange the sheets so that they fit together (see additional page with the overview of the prints). Fold the single sheets on the upper and right edge along the thin frame lines. Begin with the left lower sheet and then tape the frame lines together precisely.

Step 3

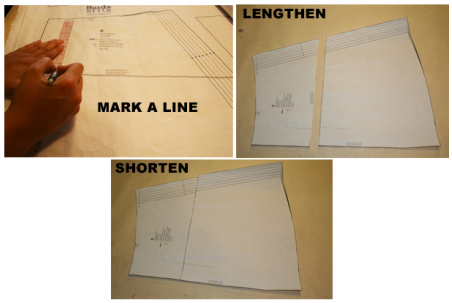

ADJUST PATTERN SIZES
Select your size according to the Burda-dimension table: dresses, blouses, jackets and coats according to the bust size, trousers and skirts according to the hip width. Change the pattern to fit your measurements if they deviate from the Burda-size chart. Cut out the pattern according to your size.
Refer to our â“Adjust patterns for mixed sizesâ“ technique

Upper Waistline: 2 cm below the waist.
Sizes 34 to 46
In part 1, the stitching line is depicted for a size 32. For other sizes, draw the stitching line, ending at the slit marking, at the same distance of the front middle.

LENGTHENING OR SHORTENING THE PATTERN PIECES
Our pattern is calculated for a height of 5â“ 6â“ (168 cm). If you are taller or shorter, you can adjust the pattern pieces along the lines marked “lengthen or shorten here”. This way the proper fit is maintained. Always adjust all pattern pieces along the same line to the

same degree.

How to lengthen and shorten pattern pieces:
Cut the pattern pieces along the marked lines
To lengthen, slide the two halves of the pattern piece as far apart as necessary.
To shorten, overlap the two halves of the pattern piece as far as necessary. Blend the side edges.

Step 4

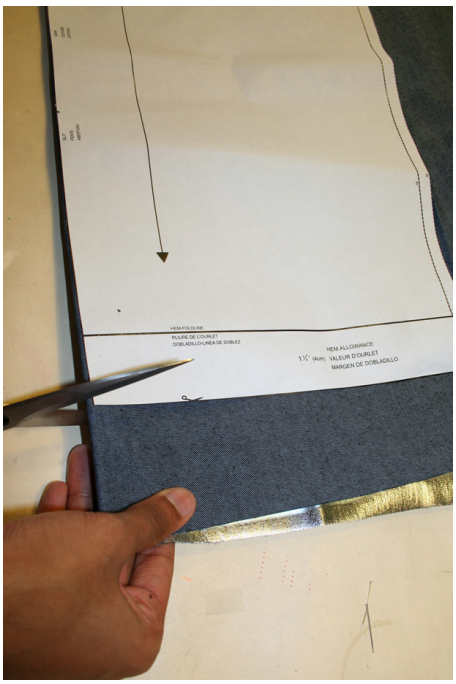

CUTTING OUT
FOLD (â“ â“ â“ â“) means: Cut on the fold, the fold being the center of the pattern piece, but never a cut edge or seam. The piece should be cut double, with the fold line forming the center line. Pattern pieces that are outlined with a broken line in the cutting diagrams are to be placed face down on the fabric. The cutting diagrams on the pattern sheet show how the pattern pieces should be placed on the fabric.

The cutting diagrams show the placement of the pattern on the fabric.
For a single layer of fabric, the pattern pieces are pinned to the right side. For double layers of fabric, the right sides are facing and the pattern pieces are pinned to the wrong side. The pattern pieces that are shown extending over the fold of the fabric in the cutting diagram should be cut last from a single layer of fabric.

Step 5

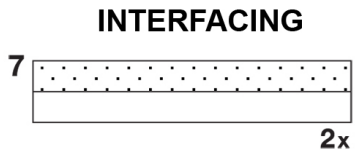

SEAM AND HEMLINE ALLOWANCES are included on an average:
1 5â”8" (4 cm) for hem, 5/8â“ (1.5 cm) for all edges and stitches. Using BURDA copying paper, transfer the lines and signs of the

pattern onto the wrong side of the fabric. Instructions can be found in the packaging.

Sewing
While sewing, the right sides of the fabric are facing.
Transfer all lines of the pattern onto the right side of the fabric using basting stitches.

Interfacing
Cut interfacing according to drawings and iron onto the wrong side of the fabric.

Step 6

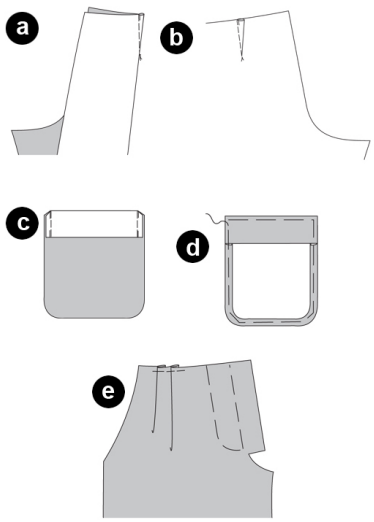

PANTS
Darts
Stitch darts of the back pant pieces from edge toward point. Tie thread. (a) Iron dart to the back middle. (b).

Pockets
Trim edges. Turn trimming outside at the wrap line. Stitch small edges onto the pocket. Fold over trimming and seam allowances . ©

Lay pleats of the front pant pieces in the direction of the arrow. Pin. (d)

Step 7

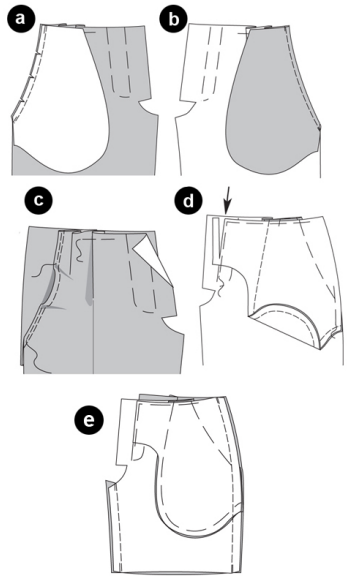

Hip Yoke Pockets
Place pocket right sides facing onto the front pant piece. Pin pocket edges Onto each other (seam number 1) and stitch. (a) Fold over and pin pocket to the inside. Iron edge and stitch, allowing 0.7cm (1/4 inch) (b).

Pin the front pant piece to the hip yoke piece so that the opening of the pocket meets with the line marked BASE, right sides of the pocket and the hip yoke are facing. Adjust the pocket opening, pin as depicted. ©

Place the pocket piece onto the hip yoke piece; do not take in the front pant piece. Stitch. De-baste seam allowances held together. Pin the side, upper and front edges of the hip yoke pieces onto the front pant piece. Pay attention: At the right hip yoke piece, cut the seam allowance of the front edge at the front middle (arrow). (d)

Side Seams/ Inner Leg Seams
Place front pant pieces right sides facing onto the back pant pieces. Stitch side seams (seam number 2), pin inner leg seams (seam number 3). Stitch seams. Trim seam allowances and finish. (e)

Step 8

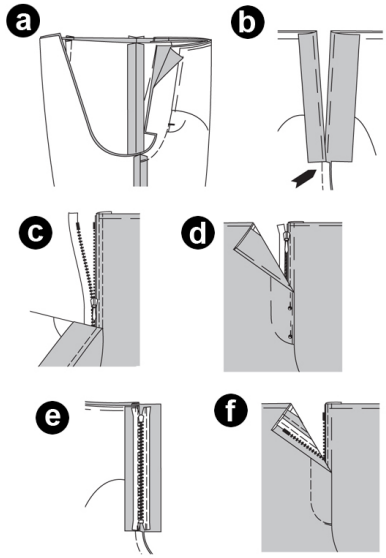

Front Middle Seam
Turn one pant leg. Push pant legs into each other, right sides facing. Stitch middle seam from the slit marking until you reach the inner seam lines. Secure seam ends. Cut back the seam allowances at the rounded edge. Trim seam allowances; also trim them at the front trimmings and the back middle seam. (a)

Pin the trimming of the right front pant piece to the inside of the front middle. At the left front pant piece, let the trimming stick out 1 cm as underlap – this will cover the zip later. Fold and pin the remaining trimming, iron. (b)

Pin the trimming close to the zip teeth onto the zip band and stitch neatly. ©

Close zip. Pin slit close middle on middle. (d)

Pin the zip band onto the right trimming, do not take in the pant piece. Stitch. (e)

Stitch right slit edge as depicted, taking in the trimming. (f)

Step 9

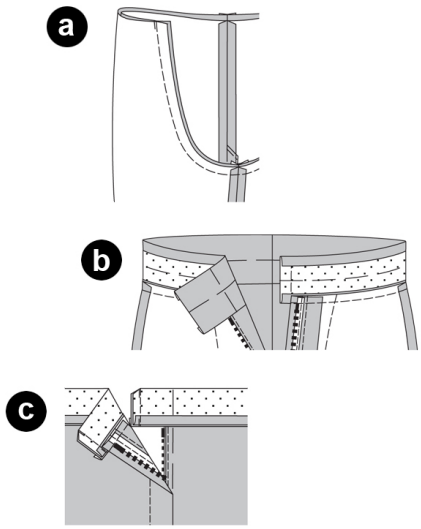

Back Middle Seams
Push pant legs into each other again, right sides facing. Stitch back middle seam. Fold apart and iron the seam allowances from the top to the point where it starts curving. (a)

Waistband
Place waistband pieces onto each other, right sides facing. Stitch middle seam. Finish seam allowances.

Pin waistband middle on middle onto the upper pant edge (seam number 4). Stitch. Iron the seam allowances into the waistband, iron the allowances of the Other long edge to the inside. (b)

Fold waistband at wrap line, right side inside. Stitch narrow edges onto another, at the right for the front middle, at the left for the underlap. Trim seam allowances. Cut edges diagonally. Turn waistband, pin to the base seam on the inside. Stitch all waistband edges neatly, stitching the inner half. Integrate buttonhole into the right side of the
waistband. Sew button to the underlap. ©

Step 10

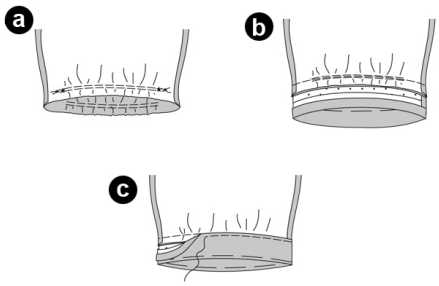

Pant Cuff
Fold cuff, right side inside. Stitch narrow edges onto each other. Finish seam allowances.

Take in lower pant edge, stitching with wide stitches from star symbol to star in two rows next to each other. Pull bobbin thread so it matches cuff width. Tie thread. Distribute width evenly. (a)

Pin cuff half with interfacing onto the lower pant edge right sides facing (seam number 5). The cuff seam meets the side seam; the horizontal line meets the inner leg seam. Stitch cuff. Iron seam allowances into the cuff. Finish the seam allowance of the other long ends. (b)

Turn cuff to the inside at the wrap line, pin to the base seam. Stitch cuff edge Neatly, stitching the inner half as well. ©

Step 11

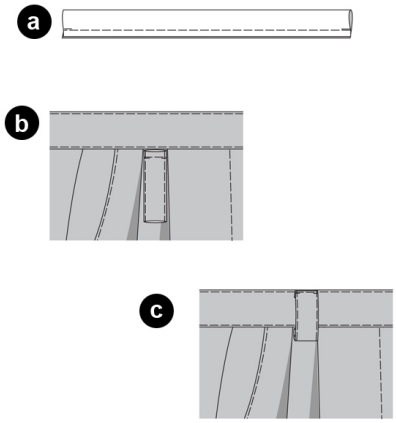

Loops
Fold strip lengthwise, right side inside. Stitch long edges onto each other 2 Cm (3/4 inch) from the wrap line. Trim seam allowances. Turn strip. Pin edges, iron and stitch neatly. Cut strip into 5 pieces of equal length. De-baste ends. (a)

2Stitch loops between the pleats, above the darts and the back middle seam according to the drawing and stitch 0.7 cm (1/4 inch) from the waistband seam base. (b) Turn loops up, fold in and stitch neatly onto the upper waistband edge ©.

BurdaStyle

Tonia